DEMOLITION HAMMER

Model HM1500

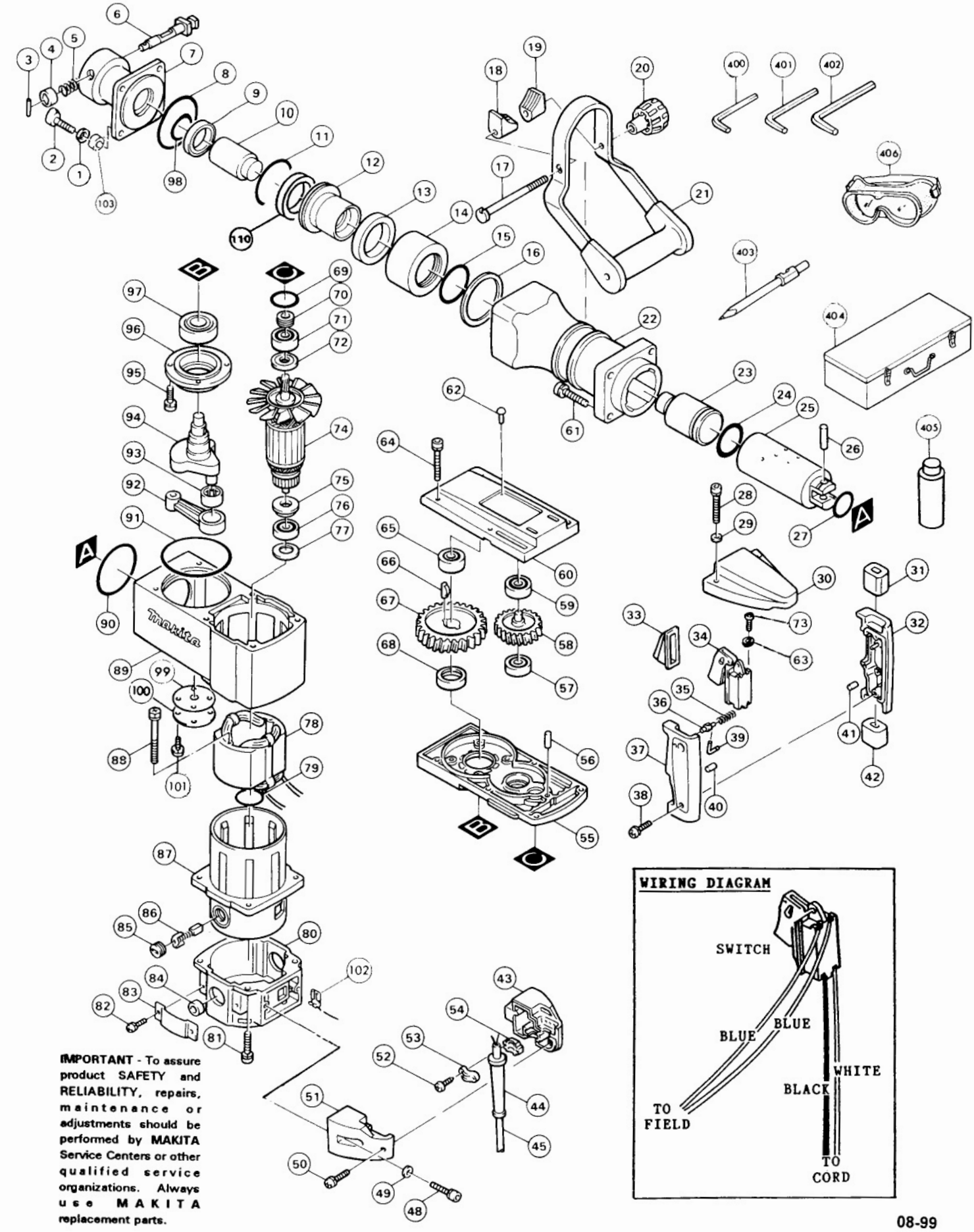

IMPORTANT - To assure product SAFETY and RELIABILITY, repairs, maintenance or adjustments should be performed by **MAKITA** Service Centers or other qualified service organizations. Always use **MAKITA** replacement parts.

08-99

Fig.	Part No.	Qty. Used	Description
1	253989-3	4	SPRING WASHER 12
2	•	4	H.S.H. BOLT M12X35
3	256219-1	1	PIN 4
4	322699-4	1	RETAINER RING
5	231281-7	1	COMPRESSION SPRING 15
6	322567-1	1	TOOL RETAINER
7	***	1	TOOL HOLDER
8	213755-0	1	O RING 75
9	213517-6	1	X RING 40
10	***	1	IMPACT BOLT
11	213717-8	1	O RING 63
12	322385-7	1	IMPACT BOLT HOLDER
13	262050-5	1	RUBBER RING 54
14	322386-5	1	CYLINDER (B)
15	213660-1	1	O RING 53
16	261084-5	1	RUBBER WASHER 63
17	265956-6	1	SET BOLT M10X120
18	414819-5	1	HANDLE BASE
19	414819-5	1	HANDLE BASE
20	252633-9	1	KNOB
21	421386-3	1	SIDE HANDLE
22	316272-0	1	BARREL
23	322383-1	1	STRIKER
24	213564-7	1	O RING 45
25	322387-3	1	PISTON CYLINDER
26	256209-4	1	PIN 10
27	213473-0	1	O RING 33
28	922376-4	2	H.S.H. BOLT M6X55
29	941152-7	2	FLAT WASHER 6
30	414646-0	1	UPPER HANDLE
31	421373-2	1	RUBBER
32	182429-3	1	HANDLE SET (Incl. Fig.: 37,40,41)
33	421265-5	1	DUST COVER
34	651145-3	1	SWITCH
35	231298-0	1	COMPRESSION SPRING 6
36	414885-2	1	LOCK BUTTON
37	182429-3	1	HANDLE SET (Incl. Fig.: 32,40,41)
38	911248-8	2	P.H. SCREW M5X28
39	322464-1	1	LOCK PIN
40	263002-9	1	RUBBER PIN 4
41	263002-9	1	RUBBER PIN 4
42	421373-2	1	RUBBER
43	182405-7	1	LOWER HANDLE SET
			(Incl. Fig.: 51)
44	682505-8	1	CORD GUARD 10-90
45	664471-1	1	POWER SUPPLY CORD
			(2X14X16; SJ)
48	922356-0	2	H.S.H. BOLT M6X35
49	941152-7	2	FLAT WASHER 6
50	911248-8	1	P.H. SCREW M5X28
51	182405-7	1	LOWER HANDLE SET
			(Incl. Fig.: 43)
52	265941-9	2	TAPPING SCREW 4X18
53	687051-6	1	STRAIN RELIEF
54	687052-4	1	STRAIN RELIEF
55	159189-2	1	GEAR HOUSING COMPLETE
			(With O Ring 35, 213460-9)
56	256111-1	1	PIN 6
57	211106-1	1	BALL BEARING 6201LLB
58	221781-5	1	HELICAL GEAR 37
59	211106-1	1	BALL BEARING 6201LLB
60	316271-2	1	GEAR HOUSING COVER
61	265367-5	4	H.S.H. BOLT M8X40
62	953106-2	4	RIVET 0-5
63	652252-5	4	CLAMP WASHER
64	922376-4	4	H.S.H. BOLT M6X55
65	211211-4	1	BALL BEARING 6302LLB
66	254038-9	2	WOODRUFF KEY 4
67	221782-3	1	HELICAL GEAR 55
68	213354-8	1	OIL SEAL 25
69	213460-9	1	O RING 35
70	331367-8	1	SEALING SCREW
71	211206-7	1	BALL BEARING 6202LLB
72	213202-1	1	DUST SEAL 15
73	652014-1	4	P.H. SCREW 4X8
74	514956-6	1	ARMATURE ASS'Y 115V
			(Incl. Fig.: 71,72,75 & 76)
75	681624-7	1	INSULATION WASHER
76	211066-7	1	BALL BEARING 6200LLB
77	253794-8	1	FLAT WASHER 18
78	624901-4	1	FIELD 115V
79	213406-5	1	O RING 30
80	316268-1	1	REAR CASE
81	922356-0	4	H.S.H. BOLT M6X35
82	911211-1	4	P.H. SCREW M5X12
83	343748-4	2	HOLDER CAP PLATE
84	262044-0	2	RUBBER RING 12
85	643700-5	2	BRUSH HOLDER CAP 7-18
86	* *	1	CARBON BRUSH SET (CB-201)
87	* *	1	MOTOR HOUSING COMPLETE
			(Incl. Fig. 79 & 2 each: Set Ring,
			414665-6 & Brush Holder, • •)
88	265341-3	2	HEX BOLT M5X75
89	159602-0	1	CRANK HOUSING
90	213755-0	1	O RING 75
91	213806-9	1	O RING 90
92	322381-5	1	CONNECTING ROD
93	212309-0	1	NEEDLE BEARING 2016
94	152373-8	1	CRANKSHAFT COMPLETE
			(Incl. Inner Race 1716, 216115-5)
95	265366-7	4	H.S.H. BOLT M6X22
96	316267-3	1	BEARING BOX
97	211359-2	1	BALL BEARING 6205
98	213504-5	1	O RING 40
99	442009-0	1	MOTOR HOUSING PACKING
100	341397-1	1	MOTOR HOUSING COVER
101	911211-1	4	P.H. SCREW M5X12
102	654098-5	2	RECEPTACLE
103	*	1	RING 12
110	****	1	NYLON WASHER 42
ACCESSORIES			
400	783203-8	1	HEX WRENCH 5
401	783204-6	1	HEX WRENCH 6
402	783207-0	1	HEX WRENCH 10
403	751407-0	1	BULL POINT 30-410
404	182629-5	1	STEEL CARRYING CASE
405	181490-7	1	HAMMER GREASE
406	191686-2	1	GOGGLES

• SEE SERVICE CHANGE 1
** SEE SERVICE CHANGE 2
*** SEE SERVICE CHANGE 3
****SEE SERVICE CHANGE 4

SERVICE CHANGE

1) Addition of Ring from S/N 6,388E.

TYPE 1 **TYPE 2**

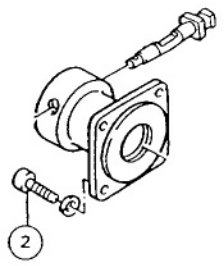

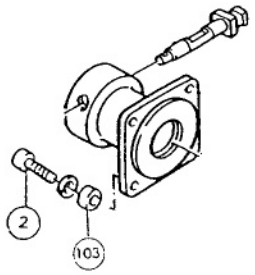

FIG.	DESCRIPTION	TYPE 1	TYPE 2
2	H.S.H. Bolt	Part #265368-3 M12x35	Part #265997-2 M12x40
103	Ring 12	----------	Part #257182-1 See Service Change 3

The above parts are interchangeable as a set.

2) Change on Brush Holder.

TYPE 1 **TYPE 2**

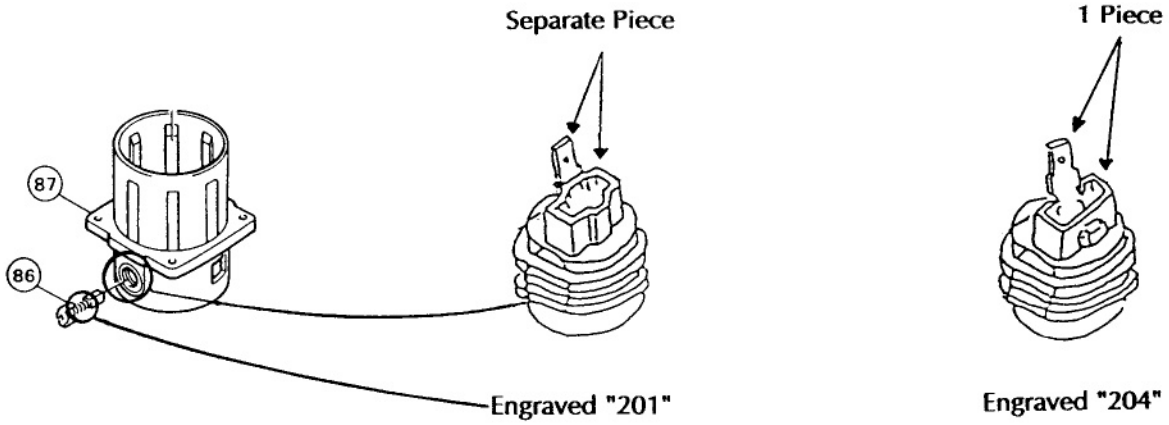

FIG.	DESCRIPTION	TYPE 1	TYPE 2	TYPE 3	TYPE 4
86	Carbon Brush	Part # 191944-6 CB-201 (Discontinued)	Part # 191957-7 CB-204	----------	----------
87	Motor Housing (Incl. Brush Holder)	Part # 159164-8 (Discontinued)	Part # 159631-3	----------	----------
		Part # 643703-9 (Discontinued)	Part # 643706-3 (Discontinued)	Part # 643931-6 (Discontinued)	Part # 643711-0

The above parts are interchangeable as a set.

3) Change on Tool Holder and Impact Bolt from S/N 8,682E.

TYPE 1 **TYPE 2**

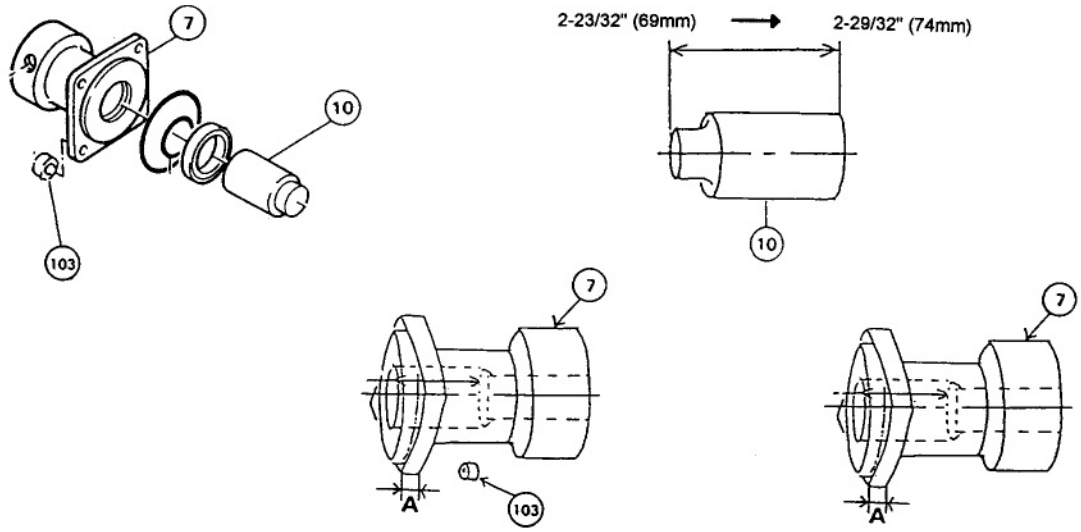

FIG.	DESCRIPTION	TYPE 1	TYPE 2
7	Tool Holder	Part #322514-2 (Discontinued)	Part #322692-8
10	Impact Bolt	Part #322384-9 (Discontinued)	Part #322693-6
103	Ring 12	Part #257182-1	----------

The above parts are interchangeable as a set.

SERVICE CHANGE

4) Change on Impact Bolt Holder from S/N 173,41E on HM1500; S/N 5113E on HM1500B.

Type 1 Type 2

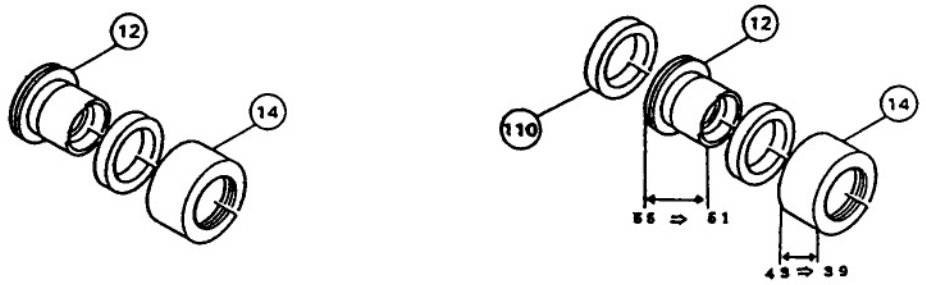

Fig.	Description	Type 1	Type 2
12	Impact Bolt Holder	Part #322385-7 (Discontinued)	Part #322931-6
14	Cylinder B	Part #322386-5 (Discontinued)	Part #322930-8
110	Nylon Washer 42	----------	Part #261105-3

The above parts are completely interchangeable as a set.